UNIT-2

Telecommunication systems:

- GSM: Mobile services,
- System architecture,
- Radio interface,
- Protocols,
- Localization and calling,
- Handover,
- Security
- New data services.

GSM : Mobile services, System architecture, Radio interface, Protocols, Localization and calling,Handover,Security,andNewdataservices.

GSM Services: GSM is the digital mobile telecommunication system in the world today. It is used by over 800 million people in more than 190 countries. GSM permits the integration of different voice and data services and the interworking with existing networks. Services make a network interesting for customers. GSM has defined three different categories of services: bearer, tele and supplementary services.

Bearer services: GSM specifies different mechanisms for data transmission, the original GSM

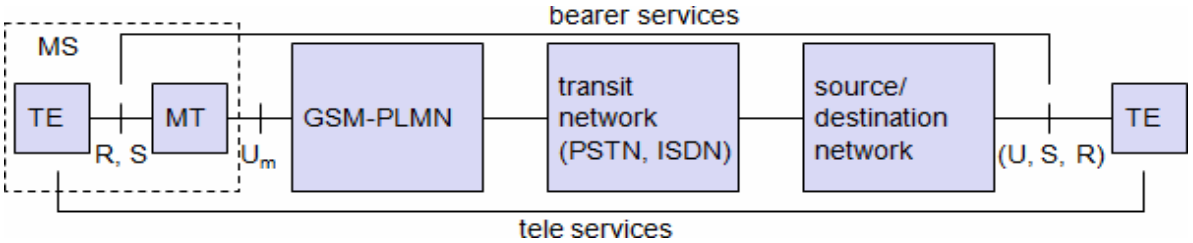

allowing for data rates of up to 9600 bit/s for non-voice services. Bearer services permit transparent and non-transparent, synchronous or asynchronous data transmission.

Transparent bearer services: Transfer of data using physical layer is said to be transparent when the interface for service uses only physical layer protocols. Physical layer is the layer which transmits or receives data after formatting or multiplexing or insertion of **forward error correction (FEC)** using a wired (fiber) or wireless (radio or microwave) medium.

Forward error correction (FEC) bits: The physical layer protocol in a GSM bearer service also provides for FEC. Bluetooth also provides FEC. The FEC bring out redundant bits along with the data to be transmitted. This redundant data allows the receiver to detect and correct errors.

- **Non-transparent bearer services** use protocols of layers two and three to implement error correction and flow control. These services use the transparent bearer services, adding a **radio link protocol (RLP).** This protocol comprises mechanisms of **high-level data link**

control (HDLC), and special selective-reject mechanisms to trigger retransmission of erroneous data.

- Synchronous and asynchronous data transmission:
  - Synchronous means data is transmitted from a transceiver at a fixed rate with constant phase differences are maintained b/w two devices. It means establish a constant clock rate b/w receiver and sender. (i.e not using handshaking technique).
  - Asynchronous means data is transmitted by the transceiver at variable rate b/w two devices. It means, first set the bandwidth and provide the clock rate b/w two devices.

GSM specifies several bearer services for interworking with PSTN, ISDN, and packet switched public data networks (PSPDN) like X.25, which is available worldwide. Data transmission can be full-duplex, synchronous with data rates of 1.2, 2.4, 4.8, and 9.6 kbit/s or full-duplex, asynchronous from 300 to 9,600 bit/s.

Tele services: GSM mainly focuses on voice-oriented tele services. These services encrypted (such as voice transmission, message services, and basic data communication) with terminals and send to / received from the PSTN or ISDN (e.g., fax).

The primary goal of GSM was the provision of high-quality digital voice transmission. Special codes (coder/decoder) are used for voice transmission, while other codes are used for the transmission of analog data for communication with traditional computer modems used in, e.g., fax machines.

Another service offered by GSM is the **emergency number** (eg 911, 999). This service is mandatory for all providers and free of charge. This connection also has the highest priority, possibly pre-empting other connections, and will automatically be set up with the closest emergency center.

It also offers the **Short Message Service (SMS)** for message transmission up to 160 characters. The successor of SMS, the **Enhanced Message Service (EMS),** offers a larger message size, formatted text, and the transmission of animated pictures, small images and ring tones in a standardized way. But with MMS, EMS was hardly used. MMS offers the transmission of larger pictures (GIF, JPG, WBMP), short video clips etc. and comes with mobile phones that integrate small cameras.

Supplementary services: GSMproviderscan offer **supplementary services**. Theseservicesoffer various enhancements for the standard telephony service, and may vary from provider to provider. Typical services are user **identification**, call **redirection**, or **forwarding** ofongoing calls, barring of incoming/outgoing calls, Advice of Charge (AoC) etc. Standard ISDN features such as **closed user groups** and **multiparty** communication may beavailable.

GSM Architecture: A GSM system consists of three subsystems, the radio sub system (RSS), the network and switching subsystem (NSS), and the operation subsystem (OSS).

Network Switching Subsystem: The NSS is responsible for performing call processing and subscriber related functions. The switching system includes the following functional units:

- Some location register (HLR): The HLR has a database that used for storage and management of subscriptions. HLR stores all the relevant subscriber data including a subscribers service profile such as call forwarding, roaming, location information and activity status.

. Visitor location register (VLR): It is a dynamic real-time database that stores both permanent and temporary subscribers data which is required for communication b/w the coverage area of MSC and VLR.

- Authentication center (AUC): A unit called the AUC provides authentication and encryption parameters that verify the users identity and ensure the confidentiality of each call.

- Equipment identity register (EIR): It is a database that contains information about the identity of mobile equipment that prevents calls from stolen, unauthorized or defective mobile stations.

- Mobile switching center (MSC): The MSC performs the telephony switching functions of the system. It has various other functions such as 1. Processing of signal. 2. Control calls to and from other telephone and data systems. 3. Call changing, multi-way calling, call forwarding, and other supplementary services. 4. Establishing and terminating the connection b/w MS and a fixed line phone via GMSC.

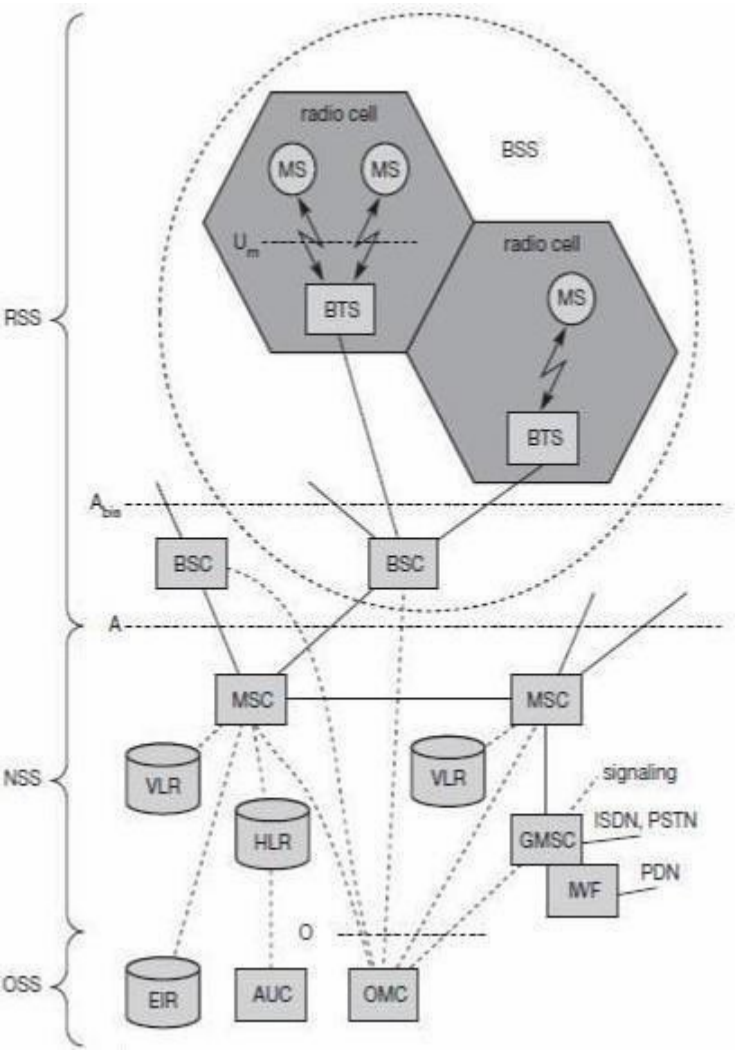

Radio Subsystem (RSS): The **radio subsystem (RSS)** comprises all radio specific entities, i.e., the **mobile stations (MS)** and the **base station subsystem (BSS)**. The figure shows the connection between the RSS and the NSS via the A **interface** (solid lines) and the connection to the OSS via the **O interface** (dashed lines).

- Base station subsystem (BSS): A GSM network comprises many BSSs, each controlled by a base station controller (BSC). The BSS performs all functions necessary to maintain radio connections to an MS, coding/decoding of voice, and rate adaptation to/from the wireless network part. Besides a BSC, the BSS contains several BTSs.

- Base station controllers (BSC): The BSC provides all the control functions and physical links between the MSC and BTS. It is a high capacity switch that provides functions such as handover, cell configuration data, and control of radio frequency (RF) power levels in BT“.

A number of BSC’s are served by and MSC.

- Basetransceiver station(BTS):The BTS handles the radio interface to the mobile station. A BTS can form a radio cell or, using sectorized antennas, several and is connected to MS via the Um interface, and to the BSC via the A BTS interface. The Um interface contains all the mechanisms necessary for wireless transmission (TDMA, FDMA etc.). The BTS is the radio equipment (transceivers and antennas) needed to service each cell in the network. A group of BTS's are controlled by an BSC.

Operation Service Subsystem (OSS): The OSS facilitates the operations of MSCs. The OSS also handles the Operation and maintenance (OMC) of the entire network.

Operation and Maintenance Centre (OMC): An OMC monitors and controls all other network entities through the 0 interface. The OMC also includes management of status reports, traffic monitoring, subscriber security management, and accounting and billing. The purpose of OSS is to offer the customer cost-effective support for centralized, regional and local operational and maintenance activities that are required for a GSM network. OSS provides a network overview and allows engineers to monitor, diagnose and troubleshoot every aspect of the GSM network.

The **mobile station (MS)** consists of the mobile equipment (the terminal) and a smart card called the Subscriber Identity Module (SIM). The SIM provides personal mobility, so that the user can have access to subscribed services irrespective of a specific terminal. By inserting the SIM card into another GSM terminal, the user is able to receive calls at that terminal, make calls from that terminal, and receive other subscribed services.

The mobile equipment is uniquely identified by the International Mobile Equipment Identity (IMEI). The SIM card contains the International Mobile Subscriber Identity (IMSI) used to identify the subscriber to the system, a secret key for authentication, and other information. The IMEI and the IMSI are independent, thereby allowing personal mobility. The SIM card may be protected against unauthorized use by a password or personal identity number.

Radio Interface The most interesting interface in a GSM system is the radio interface, as it contains various multiplexing and media access mechanisms.

Electric signals are given to antenna. The antenna radiates the electromagnetic waves. Electromagnetic waves propagate b/w the transmitter and receiver. Two electrical signals of two sources are not have same frequency at the same time. GSM TDMA Frame, Slots and Bursts

In the below figure, the GSM implements SDMA using cells with BTS and assigns an MS to a BTS. The diagram shows GSM TDMA frame. A frame is again subdivided into 8 GSM time slots, where each slot represents a physical TDM channel and lasts for 577 µs. Each TDM channel occupies the 200 kHz carrier for 577 µs every 4.615 ms. Data is transmitted in small portions, called bursts. As shown, the burst is only 546.5 µs long and contains 148 bits. The remaining 30.5 µs are used as guard space to avoid overlapping with other bursts due to different path delays and to give the transmitter time to turn on and off.

The first and last three bits of a normal burst (tail) are all set to 0 and can be used to enhance the receiver performance. The training sequence in the middle of a slot is used to adapt the parameters

Of the receiver to the current pathpropagation characteristics and to select the strongest signal in case of multi-pathpropagation. A flag S indicates whether the data field contains user or network control data.

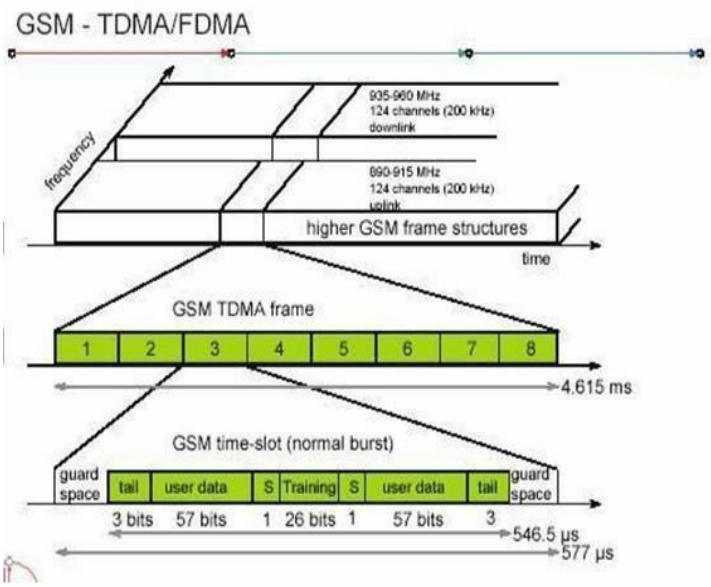

Apart from the normal burst, ETSI (1993a) defines four more bursts for data transmission: a **frequency correction** burst allows the MS to correct the local oscillator to avoid interference with neighbouring channels, a **synchronization burst** with an extended training sequence synchronizes the MS with the BTS in time, an **access burst** is used for the initial connection setup between MS and BTS, and finally a **dummy burst** is used if no datails available for a slot.

Physical, logical channels and frame hierarchy: Two types of channels,namely physical channels and logical channels are present.

Physical channel: channel defined by specifying both, a carrier frequency and a TDMA timeslot number.

Logic channel: logical channels are multiplexed into the physical channels. Each logic channel performs a specific task. Consequently the data of a logical channel is transmitted in the corresponding timeslots of the physical channel. During this process, logical channels can occupy a part of the physical channel or even the entire channel.

Frame hierarchy:TDMA frames are grouped into two types of multiframes:

- 26-frame multiframe (4.615ms x 26 = 120 ms) comprising of 26 TDMA frames. This multiframe is used to carry traffic channels and their associated control channels.
- 51-frame multiframe (4.615ms x 51 □ 235.4 ms) comprising 51 TDMA frames. This

multiframe is exclusively used for control channels.

The multiframe structure is further multiplexed into a single superframe of duration of 6.12sec. This means a superframe consists of

- 51 multiframes of 26 frames.
- 26 multiframes of 51 frames.

The last multiplexing level of the frame hierarchy, consisting of 2048 superframes (2715648 TDMA frames), is a hyperframe. This long time period is needed to support the GSM data encryption mechanisms. The frame hierarchy is shown below:

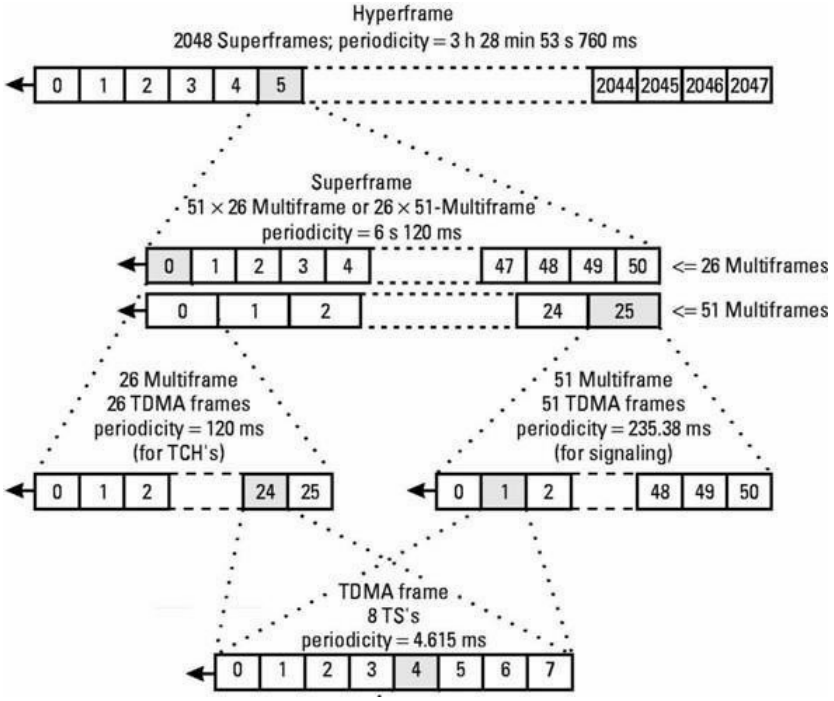

GSM Frame Hierarchy

There are two different types of logical channel within the GSM system: Traffic channels (TCHs), Control channels (CCHs).

Traffic Channels: Traffic channels carry user information such as encoded speech or user data. Traffic channels are defined by using a 26-frame multiframe.

Two general forms are defined:

i. Fullratetrafficchannels(TCH/F), at a grossbit rateof22.8 kbps(456bits / 20ms)

ii. Half rate traffic channels (TCH/H), at a gross bit rate of 11.4 kbps.

Uplink and downlink are separated by three slots (bursts) in the 26-multiframe structure. This simplifies the duplexing function in mobile terminals design, as mobiles will not need to transmit and receive at the same time. The 26-frame multiframe structure, shown below multiplexes two types of logical channels, a TCH and a Slow Associated

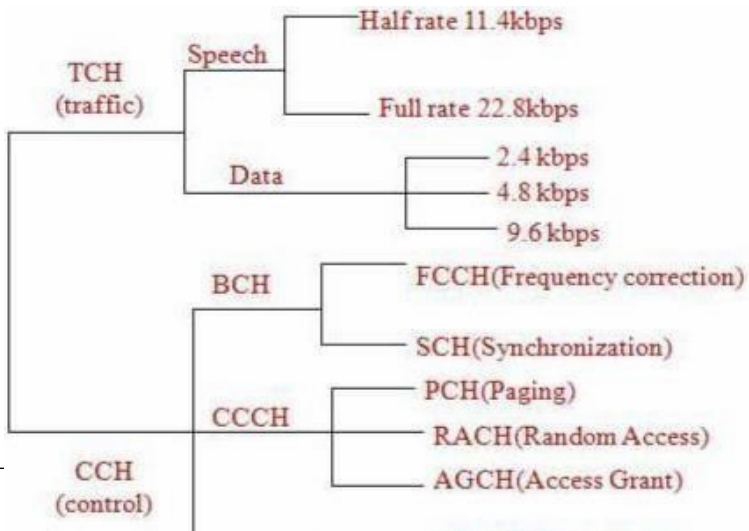

Control CHannel (SACCH).

However, if required, a Fast Associated Control CHannel (FACCH) can steal TCH in order to transmit control information at a higher bit rate. This is usually the case during the handover process. In total 24 TCH/F are transmitted and one SACCH.

Control Channels: Control channels carry system signaling and synchronization data for control procedures such as location registration, mobile station synchronization, paging, random access etc. between base station and mobile station. Three categories of control channel are defined: Broadcast, Common and Dedicated. Control channels are multiplexed into the 51-frame multiframe.

- **Broadcast control channel (BCCH)**: A BTS uses this channel to signal information to all MSs within a cell. Information transmitted in this channel is, e.g., the cell identifier, options available within this cell (frequency hopping), and frequencies available inside the cell and in neighboring cells. The BTS sends information for frequency correction via the **frequency correction channel (FCCH)** and information about time synchronization via the **synchronization channel (SCH)**, where both channels are sub channels of the BCCH.
- **Common control channel (CCCH)**: All information regarding connection setup between MS and BS is exchanged via the CCCH. For calls toward an MS, the BTS uses the **paging channel (PCH)** for paging the appropriate MS. If an MS wants to set up a call, it uses the **random access channel (RACH)** to send data to the BTS. The RACH implements multiple access (all MSs within a cell may access this channel) using slotted Aloha. This is where a collision mayoccur with other MSs in a GSM system. TheBTSusesthe**accessgrant channel (AGCH)** to signalanMS that it canusea TCH or SDCCH for further connection setup.
- **Dedicated control channel (DCCH)**: While the previous channels have all been unidirectional, the following channels are bidirectional. As long as an MS has not established a TCH with the BTS, it uses the **stand-alone dedicated control channel (SDCCH)** with a low data rate (782 bit/s) for signaling. This can comprise authentication, registration or other data needed for setting up a TCH. Each TCH and SDCCH has a **slow associated dedicated control channel (SACCH)** associated with it, which is used to exchange system information, such as the channel quality and signalpowerlevel. Finally, if moresignaling informationneedsto be transmittedand a TCH already exists, GSM uses a **fast associated dedicated control channel (FACCH)**. The FACCHusesthe timeslotswhich are otherwise used by the TCH. This is necessary in the case of handovers where BTS and MS haveto exchange larger amounts of data in less time.

<u>GSM Protocols</u>: The signaling protocol in GSM is structured into three general layers depending on the interface, as shown below.

Layer 1 is the physical layer that handles all radio-specific functions. This includes the creation of bursts according to the five different formats, multiplexing of bursts into a TDMA frame, synchronization with the BTS, detection of idle channels, and measurement of the channel quality on the downlink.

The main tasks of the physical layer contain channel coding and error detection/ correction, which are directly combined with the coding mechanisms. Channel coding using different forward error correction (FEC) schemes.

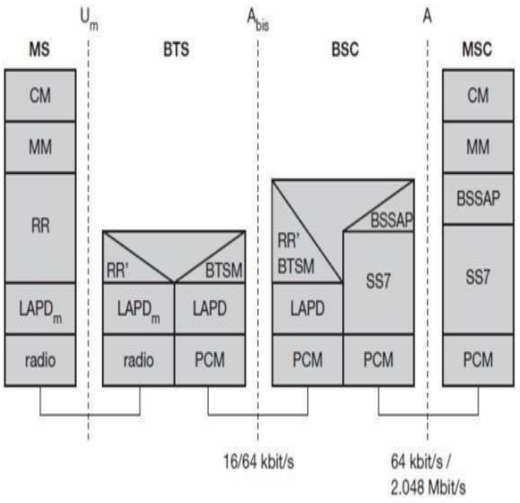

Signaling between entities in a GSM network requires higher layers. For this purpose, the **LAPDm** protocol has been defined at the Um interface for **layer two**. LAPDm has been derived from link access procedure for the D-channel (**LAPD**) in ISDN systems, which is a version of HDLC.

The **network lay**er in GSM contains several sub-layers. The lowest sub-layer is the radio resource management (RR). The functions of RR' are supported by the BSC via the BTS management (BTSM). The maintasks of RR are setup, maintenance, and release of radio channels. Mobility management (MM) contains functions for registration, authentication, identification, location updating, and the provision of a temporary mobile subscriber identity (TMSI).

Finally, the call management (CM) layer contains three entities: call **control (CC), short message service (SMS**), and **supplementary service (SS).**

SMS allows for message transfer using the control channels SDCCH and SACCH, while SS offers the services like user identification, call redirection, or forwarding of ongoing calls.

CC provides a point-to-point connection between two terminals and is used by higher layers for call establishment, call clearing and change of call parameters.

Data transmission at the physical layer typically uses pulse code modulation (PCM) systems. LAPD is used for layer two at Abis, BTSM for BTS management.

Signaling system No. 7 (SS7) is used for signaling between an MSC and a BSC. This protocol also transfers all management information between MSCs, HLR, VLRs, AuC, EIR, and OMC. An MSC can also control a BSS via a BSS application part (**BSSAP**).

Localization and Calling: The fundamental feature of the GSM system is the automatic, worldwide localization of users for which the system performs periodic location updates. The HLR always contains information about the current location and the VLR currently responsible for the MS informs the HLR about the location changes. Changing VLRs with uninterrupted availability is called roaming.

Roaming can take place within a network of one provider, between two providers in a country and also between different providers in different countries.

To locate and address an MS, several numbers are needed:

- **Mobile station international ISDN number (MSISDN)**:- The only important number for a user of GSM is the phone number. This number consists of the country code (CC), the national destination code (NDC) and the subscriber number (SN).
- **International mobile subscriber identity (IMSI)**: GSM uses the IMSI for internal unique identification of a subscriber. IMSI consists of a mobile country code (MCC), the mobile network code (MNC), and finally the mobile subscriber identification number (MSIN).
- Temporary mobile subscriber identity (TMSI): To hide the IMSI, which would give away the exact identity of the user signalling over the air interface, GSM uses the 4 byte TMSI for local subscriber identification.
- **Mobile station roamingnumber(MSRN)**: Another temporary address that hides the identity and location of a subscriber is MSRN. The VLR generates this address on request from the MSC, and the address is also stored in the HLR. MSRN contains the current visitor country code (VCC), the visitor national destination code (VNDC), the identification of the current MSC together with the subscriber number. The MSRN helps the HLR to find a subscriber for an incoming call.

For a Mobile Terminated Call*(MTC)*,thefollowingfigureshowsthedifferentstepsthattake place:

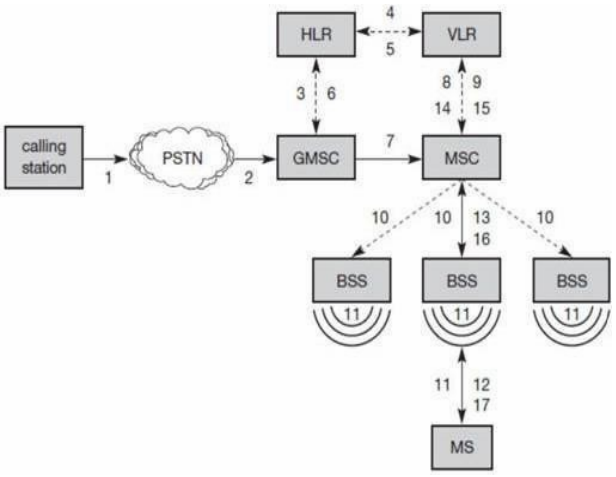

Step 1: User dials the phone number of a GSM subscriber.

Step 2: The fixed network (PSTN) identifies the number belongs to a user in GSM network and forwards the call setup to the Gateway MSC (GMSC).

Step 3: The GMSC identifies the HLR for the subscriberandsignalsthecallsetupto HLR

Step 4: The HLR checks for number existence and its subscribed services and requests an MSRN from the current VLR.

Step 5: VLR sends the MSRN to HLR

step 6: Upon receiving MSRN, the HLR determines the MSC responsible for MS and forwards the information to the GMSC

Step 7: The GMSC can now forward the call setup request to the MSC indicated

Step 8: The MSC requests the VLR for the current status of the MS

Step 9: VLR sends the requested information

Step 10: If MS is available, the MSC initiates paging in all cells it is responsible for.

Step 11: The BTSs of all BSSs transmit the paging signal to the MS

Step 12: Step 13: If MS answers, VLR performs security checks

Step 15: Till step 17: Then the VLR signals to the MSC to setup a connection to the MS

Handover: Cellular systems require handover procedures, as single cells do not cover the whole service area. However, a handover should not cause a cut-off, also called call drop.

GSM aims at maximum handover duration of 60 ms. There are two basic reasons for a handover:

1. The mobile station moves out of the range of a BTS, decreasing the received signal level increasing the error rate thereby diminishing the quality of the radio link.
2. Handover may be due to load balancing, when an MSC/BSC decides the traffic is too high in one cell and shifts some MS to other cells with a lower load.

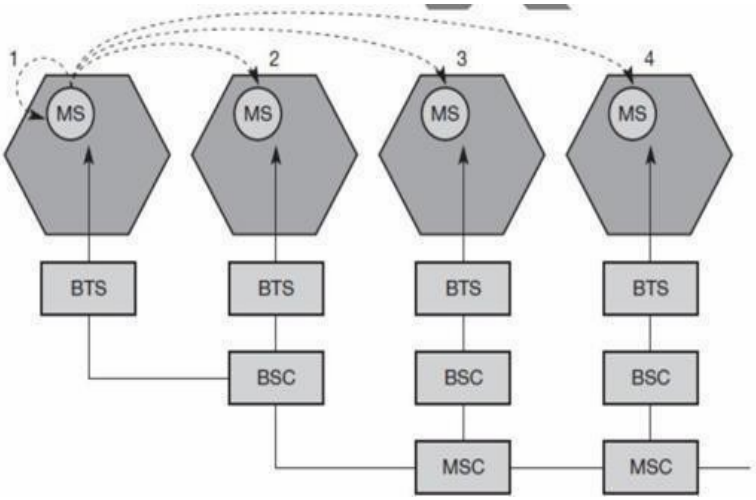

The four possible handover scenarios of GSM are shown below:

- **Intra-cell handover:** Within acell, narrow-band interference could maketransmission at a certain frequency impossible. The BSC could then decide to change the carrier frequency (scenario
- **Inter-cell, intra-BSC handover:** This is a typical handover scenario. The mobile station moves from one cell to another, but stays within the control of the same BSC. The BSC then performs a handover, assignsanewradiochannelinthenewcellandreleasesthe old one.
- **Inter-BSC, intra-MSC handover:** As a BSC only controls a limited number of cells; GSM also has to perform handovers between cells controlled by different BSCs. This handover then has to be controlled by the MSC.
- **Inter MSC handover:** A handover could be required between two cells belonging to different MSCs. Now both MSCs perform the handover together

Security: GSM offers several security services using confidential information stored in the AuC and in the individual SIM. The SIM stores personal, secret data and is protected with a PIN against unauthorized use. Three algorithms have been specified to provide security services in GSM.

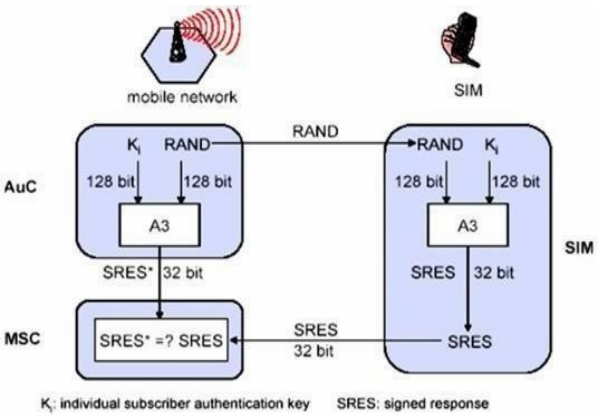

Algorithm A3 is used for **authentication**, **A5** for **encryption**, and **A8** for the **generation of a cipher key**. The various security services offered by GSM are:

Access control and authentication: The first step includes the authentication of a valid user for the

SIM. The user needs a secret PIN to access the SIM. The next step is the subscriber authentication. This step is based on a challenge-response scheme as shown in figure.

Confidentiality: All user-related data is encrypted. After authentication, BTS and MS apply encryption to voice, data, and signaling as show below fig.

Anonymity: To Provide user anonymity, all data is encrypted before transmission, and user identifiers are not used over the air-instead, GSM transmits a temporary identifier (TMSI), which is newly assigned by the VLR after each location update. Additionally, the VLR can change the TMSI at any time.

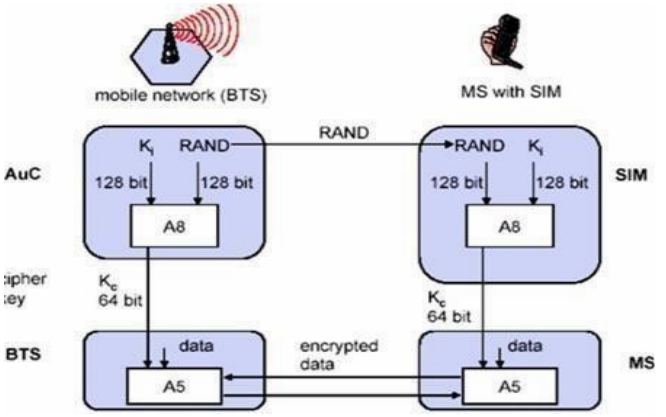

New Data Services: To enhance the data transmission capabilities of GSM, two basic approaches are possible. As the basic GSM is based on connection-oriented traffic channels, e.g., with 9.6 kbit/s each, several channels could be combined to increase bandwidth. This system is called HSCSD {high speed circuit switched data}. A more progressive step is the introduction of packet- oriented traffic in GSM, i.e., shifting the paradigm from connections/telephone thinking to packets/internet thinking. The system is called GPRS {general packet radio service}.

HSCD: A straightforward improvement of GSM's data transmission capabilities is high speed circuit switched data (HSCSD) in which higher data rates are achieved by bundling several TCHs. An MS requests one or more TCHs from the GSM network, i.e., it allocates several TDMA slots within a TDMA frame. This allocation can be asymmetrical, i.e. more slots can be allocated on the downlink than on the uplink. A major disadvantage of HSCD is that it still uses the connection-oriented mechanisms of GSM, which is not efficient for computer data traffic.

GPRS: The next step of data transmission is GPRS. It also avoids the problems of HSCSD. The **general packet radio service (GPRS)** providespacket modetransfer for applicationsthat exhibit traffic patterns such as frequent transmission of small volumes (e.g., typical web requests) or infrequent transmissions of small or medium volumes (e.g., typical web responses) according to the requirement specification

GPRS Overview: General Packet Radio Service (GPRS) is a Mobile Data Service accessible to GSM and IS-136 mobile phones users. This service is packet-switched and several numbers of users can divide the same transmission channel for transmitting the data.

General Packet Radio System is also known as **GPRS** is a third-generation step toward internet access. GPRS is also known as GSM-IP that is a Global-System Mobile Communications Internet Protocol as it keeps the users of this system online, allows to make voice calls, and access internet on- the-go. Even Time-Division Multiple Access (TDMA) users benefit from this system as it provides packet radio access. GPRS also permits the network operators to execute Internet Protocol (IP) based core architecture for integrated voice and data applications that will continue to be used and expanded for 3G services.

The packet radio principle is employed by GPRS to transport user data packets in a structure way between GSM mobile stations and external packet data networks. These packets can be directly routed to the packet switched

networks from the GPRS mobile stations.

GPRS also permits the network operators to execute Internet Protocol (IP) based core architecture for integrated voice and data applications that will continue to be used and expanded for 3G services.

In the current versions of GPRS, networks based on the Internet Protocol (IP) like the global internet or private/corporate intranets and X.25 networks are supported.

Who owns GPRS ?

The GPRS specifications are written by the European Telecommunications Standard Institute (ETSI), the European counterpart of the American National Standard Institute (ANSI).

Key Features

Following three key features describe wireless packet data:

- **The always online feature -** Removes the dial-up process, making applications only one click away.
- **An upgrade to existing systems -** Operators do not have to replace their equipment; rather, GPRS is added on top of the existing infrastructure.
- **An integral part of future 3G systems -** GPRS is the packet data core network for 3G systems EDGE and WCDMA.

Goals of GPRS

GPRS is the first step toward an end-to-end wireless infrastructure and has the following goals:

- Open architecture
- Consistent IP services
- Same infrastructure for different air interfaces
- Integrated telephony and Internet infrastructure
- Leverage industry investment in IP
- Service innovation independent of infrastructure

Benefits of GPRS

Higher Data Rate: GPRS benefits the users in many ways, one of which is higher data rates in turn of shorter access times.

***Easy Billing*:** GPRS packet transmission offers a more user-friendly billing than that offered by circuit switched services. In circuit switched services, billing is based on the duration of the connection. This is unsuitable for applications with bursty traffic. The user must pay for the entire airtime, even for idle periods when no packets are sent (e.g., when the user reads a Web page).

The advantage for the user is that he or she can be "online" over a long period of time but will be billed based on the transmitted data volume.

GPRS Applications:

GPRS has opened a wide range of unique services to the mobile wireless subscriber. Some of the characteristics that have opened a market full of enhanced value services to the users. Below are some of the characteristics:

- **Mobility -** The ability to maintain constant voice and data communications while on the move.
- **Immediacy -** Allows subscribers to obtain connectivity when needed, regardless of location and without a lengthy login session.
- **Localization -** Allows subscribers to obtain information relevant to their current location.

- Using the above three characteristics varied possible applications are being developed to offer to the mobile subscribers. These applications, in general, can be divided into two high-level categories:
- Corporation
- Consumer

These two levels further include:

- **Communications -** E-mail, fax, unified messaging and intranet/internet access, etc.
- **Value-added services -** Information services and games, etc.
- **E-commerce -** Retail, ticket purchasing, banking and financial trading, etc.
- **Location-based applications -** Navigation, traffic conditions, airline/rail schedules and location finder, etc.
- **Vertical applications -** Freight delivery, fleet management and sales-force automation.
- **Advertising -** Advertising may be location sensitive. For example, a user entering a mall can receive advertisements specific to the stores in that mall.

Along with the above applications, non-voice services like SMS, MMS and voice calls are also possible with GPRS. Closed User Group (CUG) is a common term used after GPRS is in the market, in addition, it is planned to implement supplementary services, such as Call Forwarding Unconditional (CFU), and Call Forwarding on Mobile subscriber Not Reachable (CFNRc), and closed user group (CUG).

GPRS Architecture: GPRS architecture works on the same procedure like GSM network, but, has additional entities that allow packet data transmission. This data network overlaps a second- generation GSM network providing packet data transport at the rates from 9.6 to 171 kbps. Along with the packet data transport the GSM network accommodates multiple users to share the same air interface resources concurrently.

Following is the GPRS Architecture diagram:

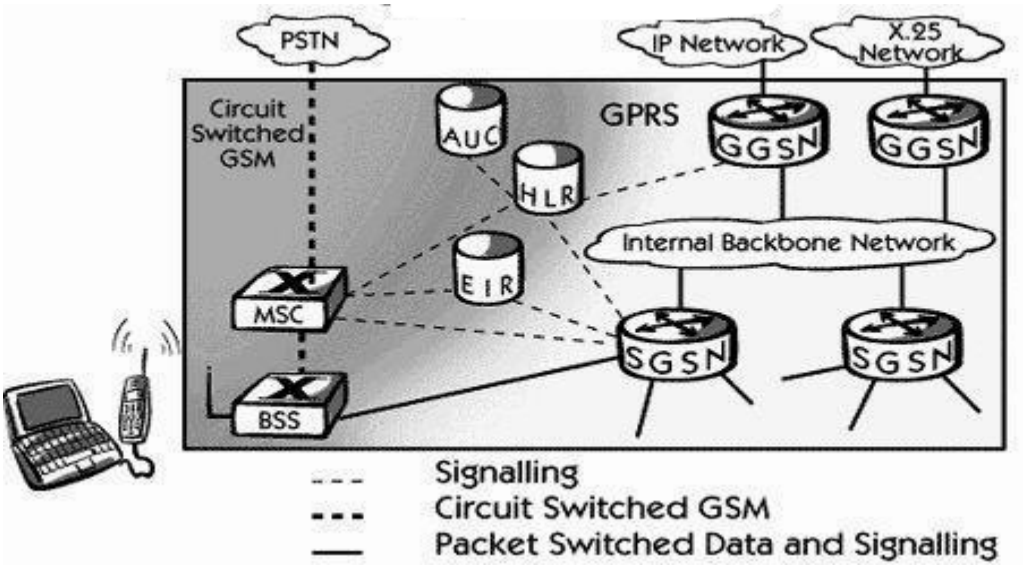

Figure: GPRS Architecture

GPRS Base Station Subsystem

Each BSC requires the installation of one or more Packet Control Units (PCUs) and a software upgrade. The PCU provides a physical and logical data interface to the Base Station Subsystem (BSS) for packet data traffic. The

BTS can also require a software upgrade but typically does not require hardware enhancements.

When either voice or data traffic is originated at the subscriber mobile, it is transported over the air interface to the BTS, and from the BTS to the BSC in the same way as a standard GSM call. However, at the output of the BSC, the traffic is separated; voice is sent to the Mobile Switching Center (MSC) per standard GSM, and data is sent to a new device called the SGSN via the PCU over a Frame Relay interface.

GPRS Support Nodes

Following two new components, called Gateway GPRS Support Nodes (GSNs) and, Serving GPRS Support Node (SGSN) are added:

Gateway GPRS Support Node (GGSN)

The Gateway GPRS Support Node acts as an interface and a router to external networks. It contains routing information for GPRS mobiles, which is used to tunnel packets through the IP based internal backbone to the correct Serving GPRS Support Node. The GGSN also collects charging information connected to the use of the external data networks and can act as a packet filter for incoming traffic.

Serving GPRS Support Node (SGSN)

The Serving GPRS Support Node is responsible for authentication of GPRS mobiles, registration of mobiles in the network, mobility management, and collecting information on charging for the use of the air interface.

Internal Backbone

The internal backbone is an IP based network used to carry packets between different GSNs. Tunnelling is used between SGSNs and GGSNs, so the internal backbone does not need any information about domains outside the GPRS network. Signalling from a GSN to a MSC, HLR or EIR is done using SS7.

Routing Area

GPRS introduces the concept of a Routing Area. This concept is similar to Location Area in GSM, except that it generally contains fewer cells. Because routing areas are smaller than location areas, less radio resources are used while broadcasting a page message.

GPRS Protocol Stack:

The flow of GPRS protocol stack and end-to-end message from MS to the GGSN is displayed in the below diagram. GTP is the protocol used between the SGSN and GGSN using the Gn interface. This is a Layer 3 tunneling protocol.

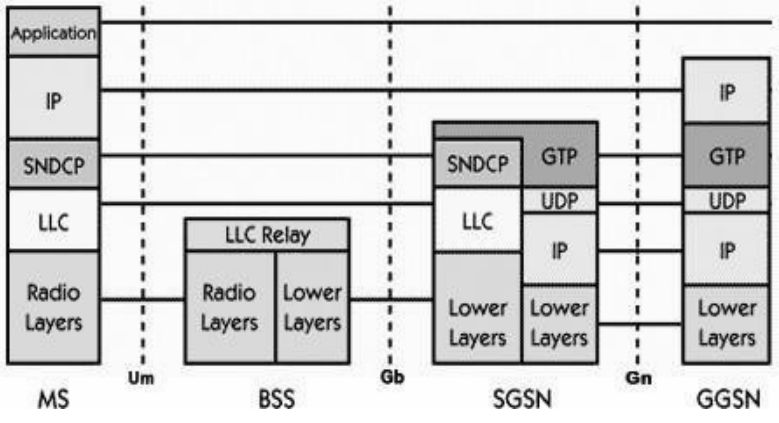

Figure: GPRS Protocol Stack

The process that takes place in the application looks like a normal IP sub-network

for the users both inside and outside the network. The vital thing that needs attention is, the application communicates via standard IP, that is carried through the GPRS network and out through the gateway GPRS. The packets that are mobile between the GGSN and the SGSN use the GPRS tunneling protocol, this way the IP addresses located on the external side of the GPRS network do not have deal with the internal backbone. UDP and IP are run by GTP.

Sub Network Dependent Convergence Protocol (SNDCP) and Logical Link Control (LLC) combination used in between the SGSN and the MS. The SNDCP flattens data to reduce the load on the radio channel. A safe logical link by encrypting packets is provided by LLC and the same LLC link is used as long as a mobile is under a single SGSN.

In case, the mobile moves to a new routing area that lies under a different SGSN; then, the old LLC link is removed and a new link is established with the new Serving GSN X.25. Services are provided by running X.25 on top of TCP/IP in the internal backbone.

APPLICATIONS OF MOBILE COMPUTING In many fields of work, the ability to keep on the move is vital in order to utilise time efficiently. The importance of Mobile Computers has been highlighted in many fields of which a few are described below:

- **Vehicles:** Music, news, road conditions, weather reports, and other broadcast information are received via digital audio broadcasting (DAB) with 1.5 Mbit/s. For personal communication, a universal mobile telecommunications system (UMTS) phone might be available offering voice and data connectivity with 384 kbit/s. The current position of the car is determined via the global positioning system (GPS). Cars driving in the same area build a local ad-hoc network for the fast exchange of information in emergency situations or to help each other keep a safe distance. In case of an accident, not only will the airbag be triggered, but the police and ambulance service will be informed via an emergency call to a service provider. Buses, trucks, and trains are already transmitting maintenance and logistic information to their home base, which helps to improve organization (fleet management), and saves time and money.
- **Emergencies:** An ambulance with a high-quality wireless connection to a hospital can carry vital information about injured persons to the hospital from the scene of the accident. All the necessary steps for this particular type of accident can be prepared and specialists can be consulted for an early diagnosis. Wireless networks are the only means of communication in the case of natural disasters such as hurricanes or earthquakes. In the worst cases, only decentralized, wireless ad-hoc networks survive.
- **Business:** Managers can use mobile computers say, critical presentations to major customers. They can access the latest market share information. They can communicate with the office about possible new offers and call meetings for discussing responds to the new proposals. A travelling salesman today needs instant access to the company's database: to ensure that files on his or her laptop reflect the current situation, to enable the company to keep track of all activities of their travelling employees, to keep databases consistent etc. With wireless access, the laptop can be turned into a true mobile office, but efficient and powerful synchronization mechanisms are needed to ensure data consistency.

- **Replacement of Wired Networks**: wireless networks can also be used to replace wired networks, e.g., remote sensors, for tradeshows, or in historic buildings. Due to economic reasons, it is often impossible to wire remote sensors for weather forecasts, earthquake detection, or to provide environmental information. Wireless connections, e.g., via satellite, can help in this situation. Other examples for wireless networks are computers, sensors, or information displays in historical buildings, where excess cabling may destroy valuable walls or floor.

Infotainment: wireless networks can provide up-to-date information at any appropriate location. The travel guide might tell you something about the history of a building (knowing via GPS, contact to a local base station, or triangulation where you are) downloading information about a concert in the building at the same evening via a local wireless network. Another growing field of wireless network applications lies in entertainment and games to enable, e.g., ad-hoc gaming networks as soon as people meet to play together.

Mobile and Handheld Devices:

Mobile phones are handheld mobile devices with large functionalities. Each mobile device essentially includes a computer. Most Mobile phones are now smart phones which communicate with other phones using a cellular service provider's network. The smartphones has multimedia features, digital music players, iPod's Bluetooth, camera, etc.

Mobile and Handheld devices are using Operating System Software that provides interfaces, perform allocation and management functions, and act as platform for running the increasingly sophisticated software that are created for mobile computing devices. These operating systems are using middleware for enabling the functions of the device.

The OS software for Mobile devices are

1. Windows CE Based Devices
2. Mac OS 4 Based Devices. (eg. Apple iPhone4)
3. Symbian OS Based Devices.